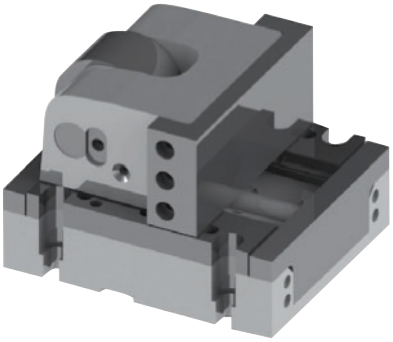

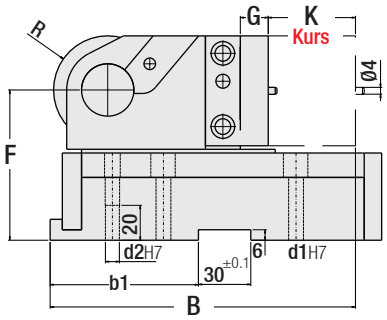

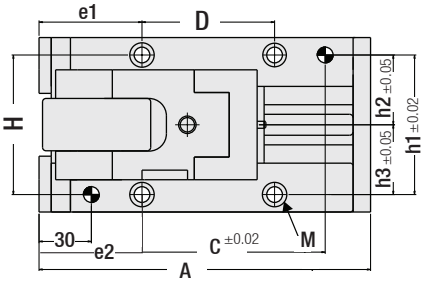

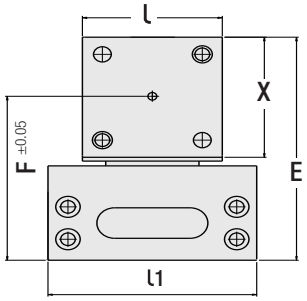

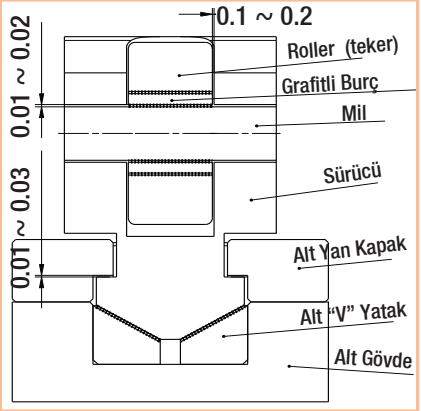

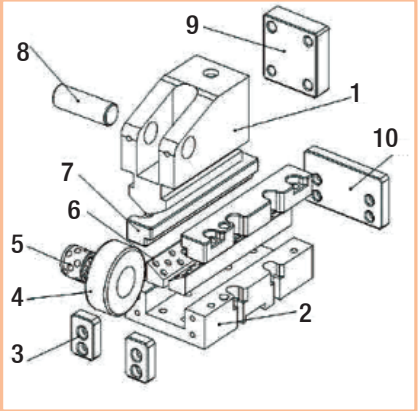

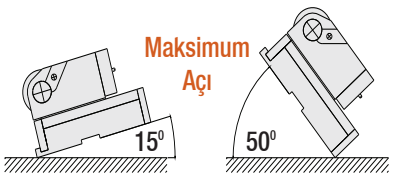

Malzeme Listesi	Parça No.	Parça Adı	Malzeme
	1	Sürücü	CK45
	2	Alt Gövde	CK45
	3	Alt Arka Kapak	CK45
	4	Roller (teker)	1.7131
	5	Grafitli Burç	SAE 430B

Malzeme Listesi	Parça No.	Parça Adı	Malzeme
	6	Alt "V" Yatak	SAE 430B
	7	Alt Yan Kapak	SAE 430B
	8	Mil	1.7131
	9	Zımba Bağ. Plakası	CK45
	10	Yay Tutucu	CK45

Roller Kam Üniteleri

Kod: RK

Sipariş Örneği: RK..

N - Newton = (0.102)Kg. daN -10 Newton = (1.020)Kg.

Sipariş Kodları (model / ölçü)	Zımba Kuvveti Max.	Geri Dönüş Yay Kuvveti daN Min.	Max.	K Kurs	Ölçüler / mm L	X	F	E	L1	A	B	C	D	H	G	b1	h1	h2	h3	e1	e2	M	d1	R
RK01 3000 50	3000 daN	300	440	50	63	63	86	117	94	190	198	56	88	79	20	75	79	39.5	39.5	51	67	4 x M8	Ø 8	31
RK01 3000 80		350	580	80						220	228	86	118											
RK01 5000 50	5000 daN	300	440	50	90	74	103	140	120	190	198	56	88	105	20	75	105	52.5	52.5	51	67	4 x M8	Ø 8	36
RK01 5000 80		350	580	80						220	228	86	118											
RK01 5000 100				100			120	157		260	268	126	158		30									
RK01 15000 50	15000 daN	570	1070	50	135	90	120	165	170	190	198	56	88	155	20	75	155	77.5	77.5	51	67	4 x M8	Ø 8	45
RK01 15000 80		500	870	80						220	228	86	118											
RK01 15000 100		500	870	100						260	268	126	158		30									
RK02 3000 50	3000 daN	300	440	50	68	63	117	86	100	200	208	56	116	82	-	90.5	82	41	41	48	76	4 x M8	Ø 8	31
RK02 3000 80				80						230	238	86	146											
RK02 3000 100		350	580	100						260	258	106	166											
RK02 5000 50	5000 daN	300	440	50	88	74	140	103	120	200	208	59	116	102	-	90.5	102	51	51	48	73	4 x M8	Ø 8	36
RK02 5000 80				80						230	238	89	146											
RK02 5000 100		350	580	100						260	258	109	166											
RK02 15000 50	15000 daN	570	1070	50	132	92	165	120	170	220	216	47	123	150	-	96.5	150	75	75	50	88	4 x M10	Ø 10	45
RK02 15000 80				80						250	246	77	153											
RK02 15000 100		500	870	100						270	266	97	173											
RK02 20000 50	20000 daN	750	1490	50	196	110	150	205	240	250	258	67	143	222	-	102	222	111	111	52	90	4 x M12	Ø 12	55
RK02 20000 80				80						280	288	97	173											
RK02 20000 100				100						300	308	117	193											
RK03 2000 22	2000 daN	200	460	22	50	50	63	85	75	115	103	30	50	63	15	65	63	31.5	31.5	32.5	43	4 x M6	Ø 6	23
RK03 2000 35				35						136	137	51	71											
RK03 3000 50	3000 daN	300	450	50	63	63	86	117	100	190	167	134	76	80	16	85	80	40	40	59	-	4 x M8	Ø 8	31
RK03 3000 80		350	580	80						220	227	164	106											
RK03 3000 100				100		87	110	141		260	287	204	146											
RK03 5000 50	5000 daN	300	440	50	90	74	103	140	130	190	167	134	76	110	16	85	110	55	55	59	-	4 x M8	Ø 8	36
RK03 5000 80		350	580	80						220	227	164	106											